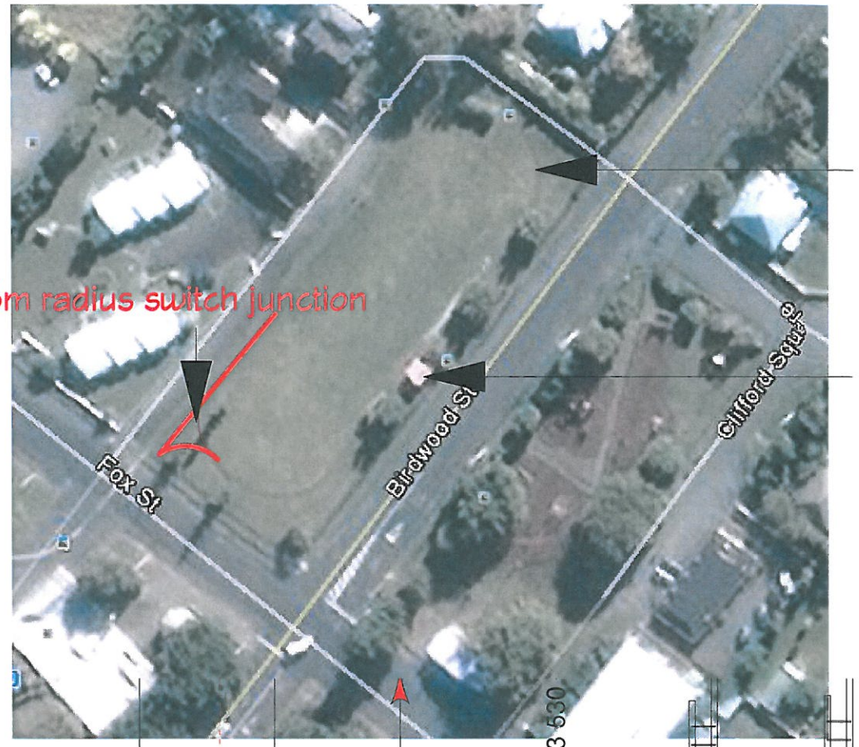

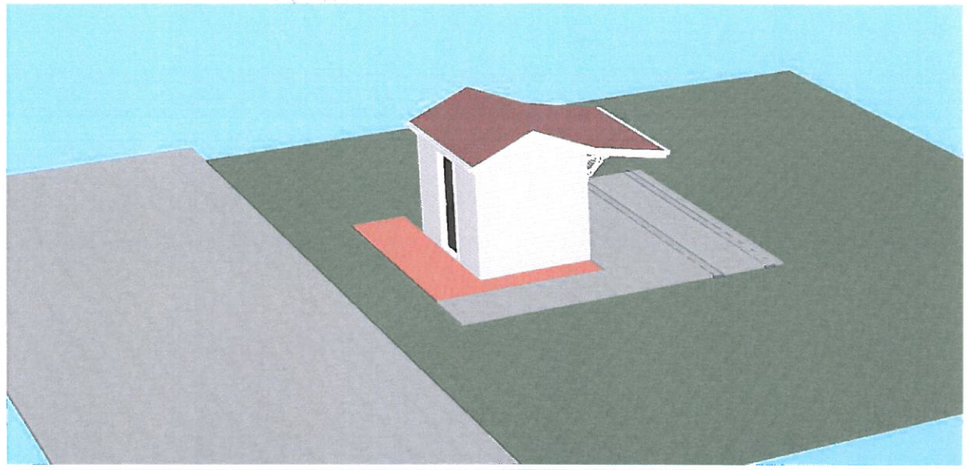

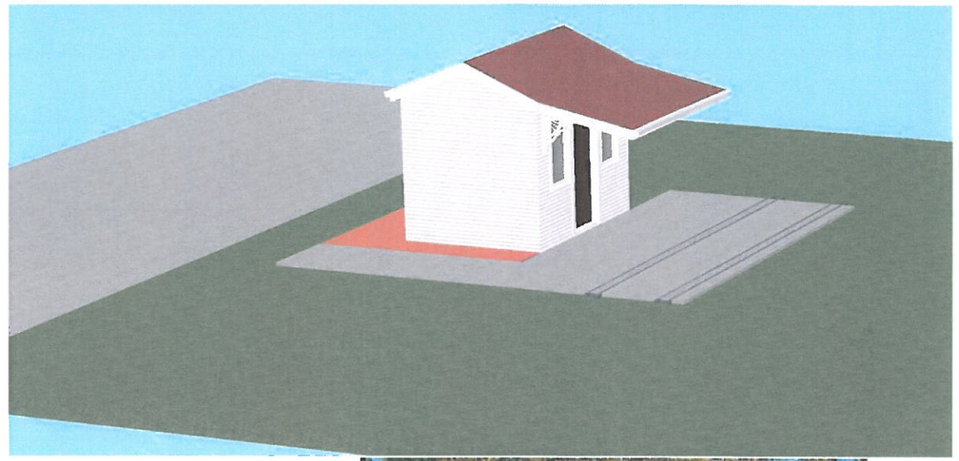

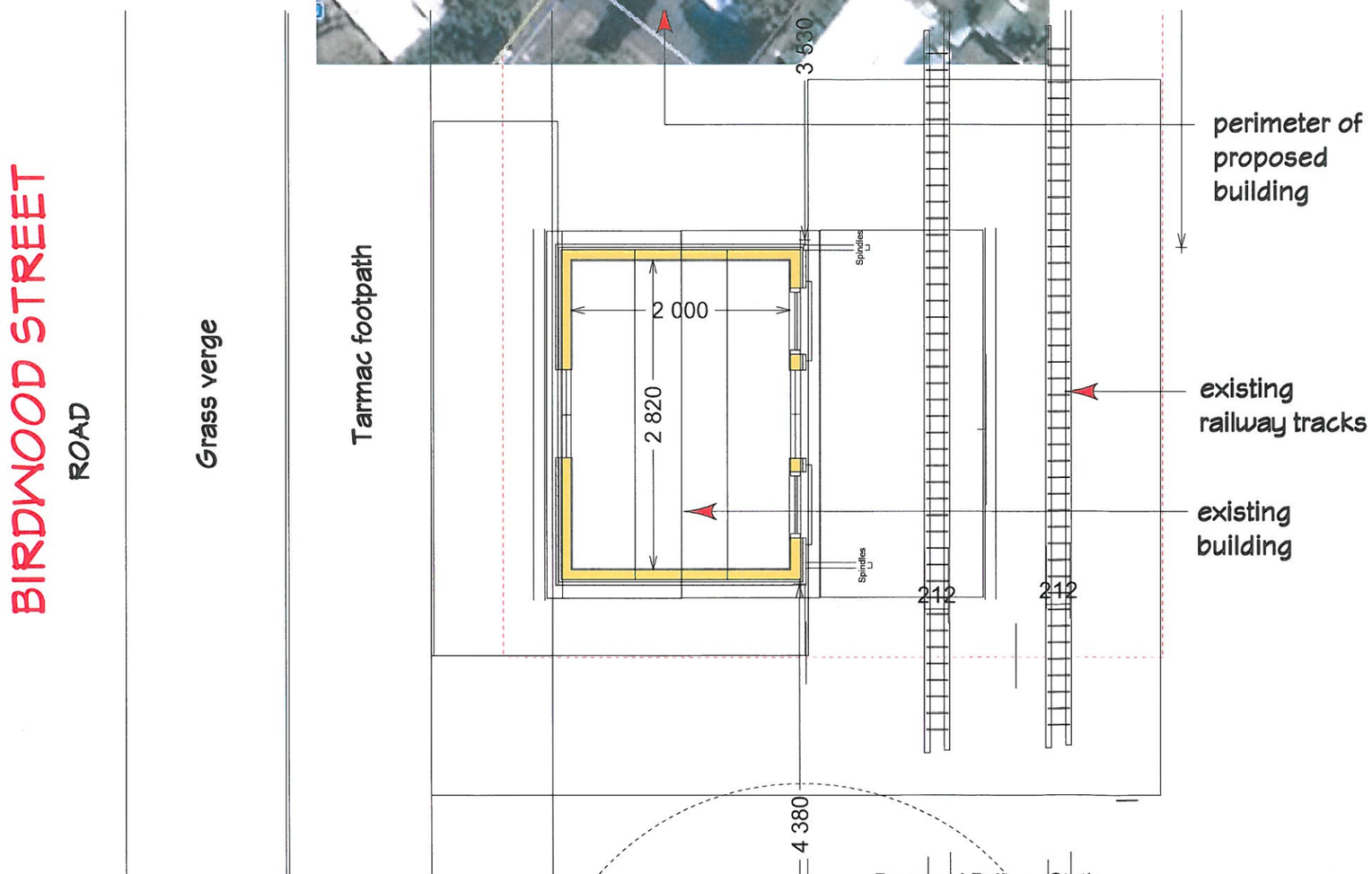

DO NOT SCALE OFF PLAN
CONTRACTOR SHALL VERIFY ALL CONDITIONS AND DIMENSIONS ON SITE BEFORE COMMENCEMENT OF ANY WORK. ALL WORK TO BE CARRIED OUT TO BEST PRACTICE AND COMPLY WITH EXISTING STATUTORY LEGISLATION AND RELEVANT STANDARDS.

Proposed Railway Station
Cross Creek Railway Society
Featherston

Clint Taylor BSc. Arch LBP Design 2
Cunning Plans 08 Ltd.
3 Yule Grove Greytown
06 304 8809 027 304 1561
cunningplans@xtra.co.nz

As Existing

Scale A3 Sheet

1

10/07/2013

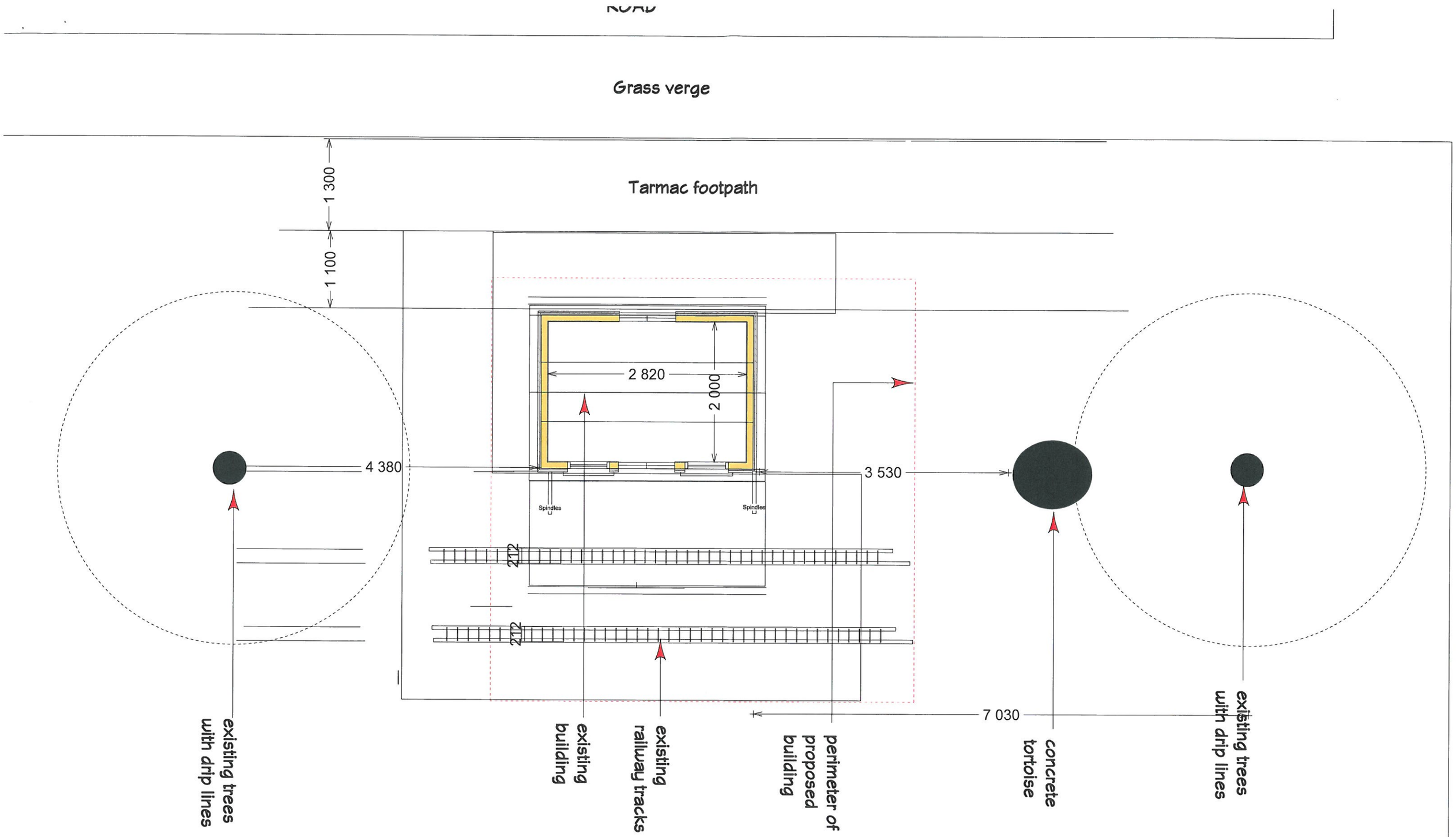

Proposed Site Plan 1:50

DO NOT SCALE OFF PLAN
CONTRACTOR SHALL VERIFY ALL CONDITIONS AND DIMENSIONS ON SITE BEFORE COMMENCEMENT OF ANY WORK. ALL WORK TO BE CARRIED OUT TO BEST PRACTICE AND COMPLY WITH EXISTING STATUTORY LEGISLATION AND RELEVANT STANDARDS.

Proposed Railway Station
Cross Creek Railway Society
Featherston

Clint Taylor BSc. Arch LBP Design 2
Cunning Plans 08 Ltd.
3 Yule Grove Greytown
06 304 8809 027 304 1561
cunningplans@xtra.co.nz

Scale A3 Sheet

2

10/07/2013

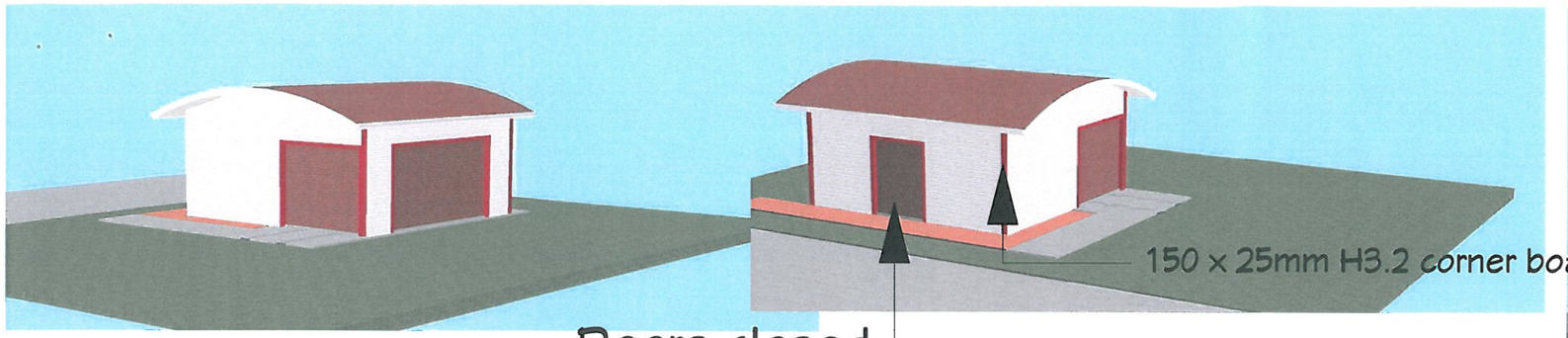

Doors closed

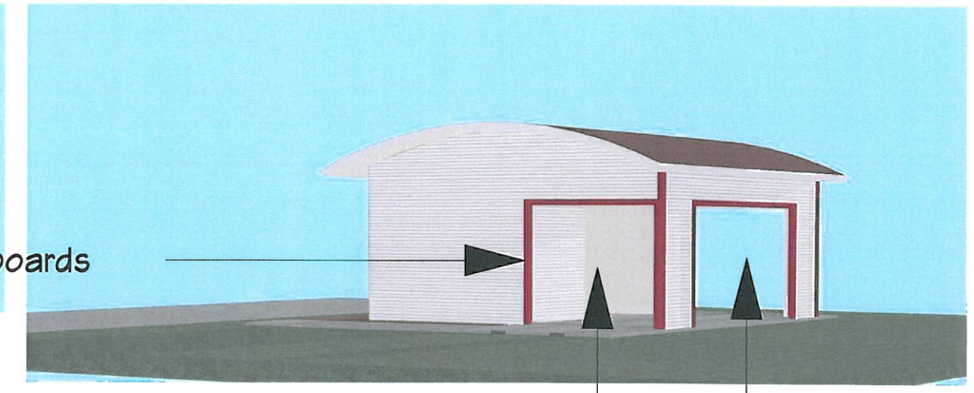

All roller shutter doors except one larger sectional door to southern elevation

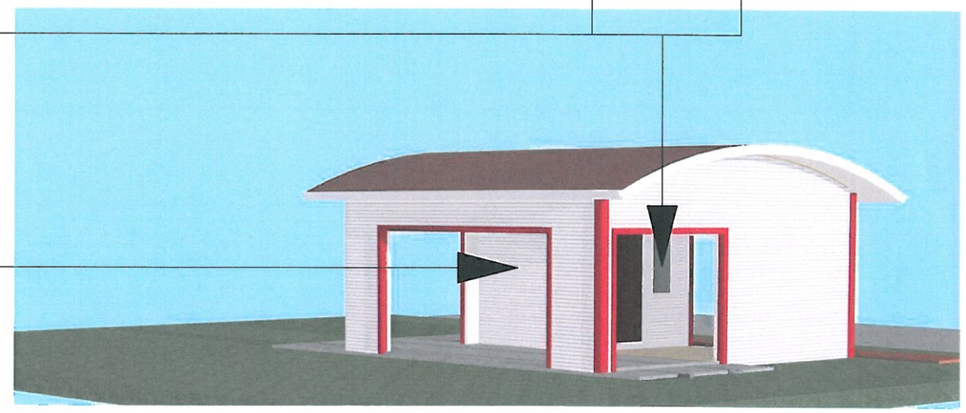

Doors open

existing building with roof removed rotated and used as ticket office

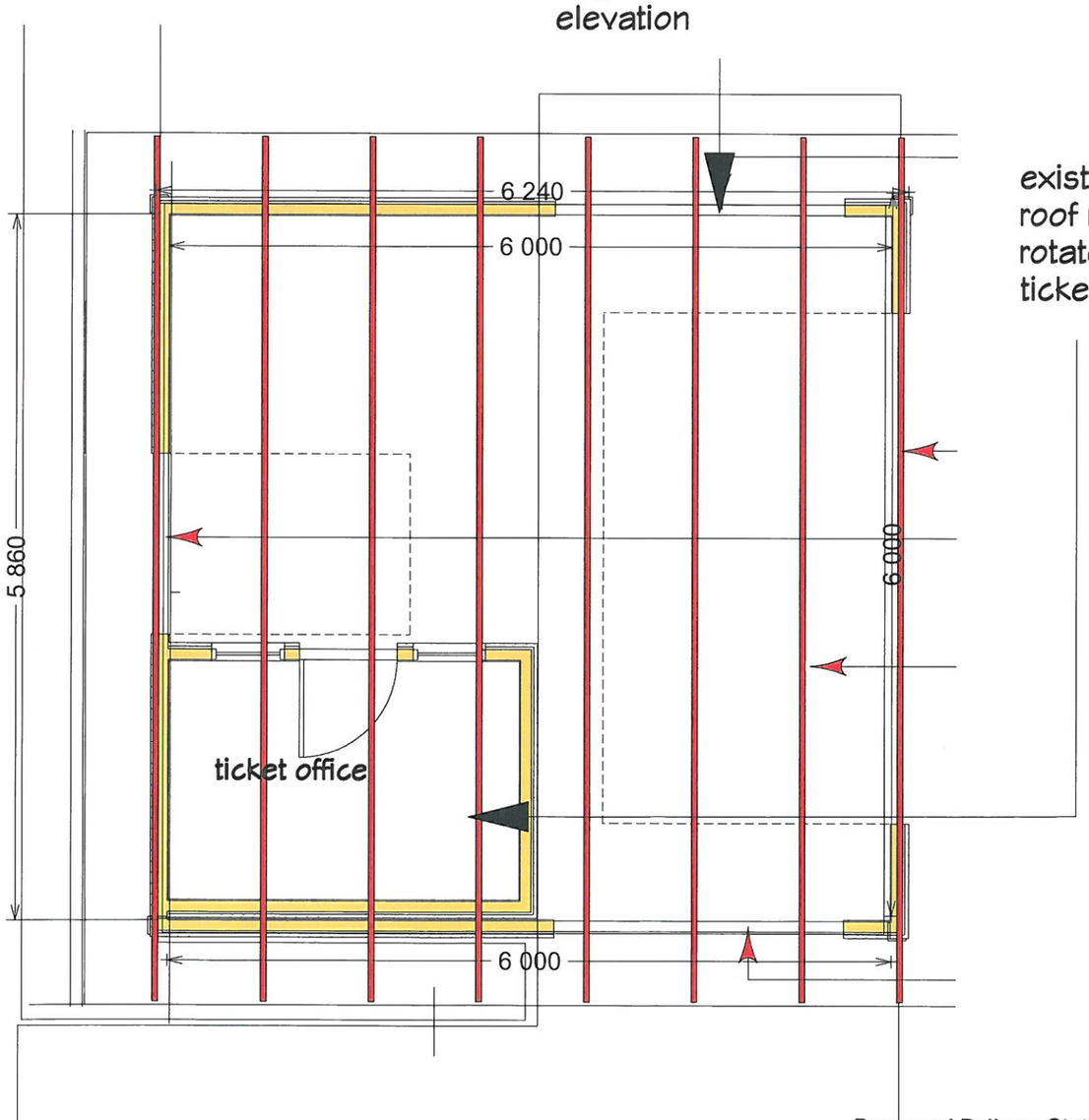

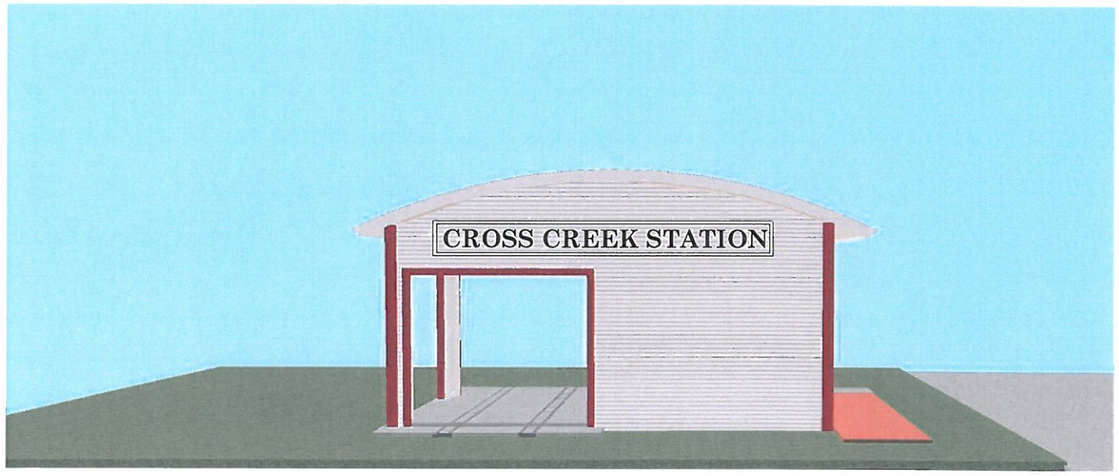

DO NOT SCALE OFF PLAN
CONTRACTOR SHALL VERIFY ALL CONDITIONS AND DIMENSIONS ON SITE BEFORE COMMENCEMENT OF ANY WORK. ALL WORK TO BE CARRIED OUT TO BEST PRACTICE AND COMPLY WITH EXISTING STATUTORY LEGISLATION AND RELEVANT STANDARDS.

Proposed Railway Station
Cross Creek Railway Society
Featherston

Clint Taylor BSc. Arch LBP Design 2
Cunning Plans 08 Ltd.
3 Yule Grove Greytown
06 304 8809 027 304 1561
cunningplans@xtra.co.nz

As Proposed

Scale A3 Sheet

3

10/07/2013

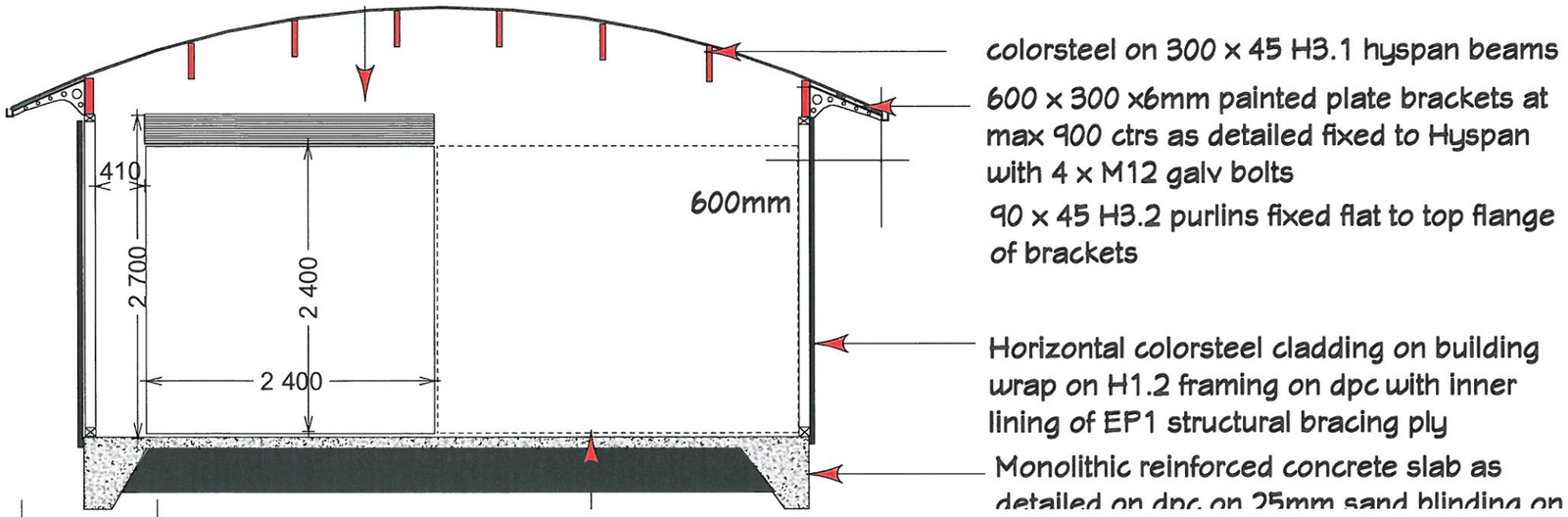

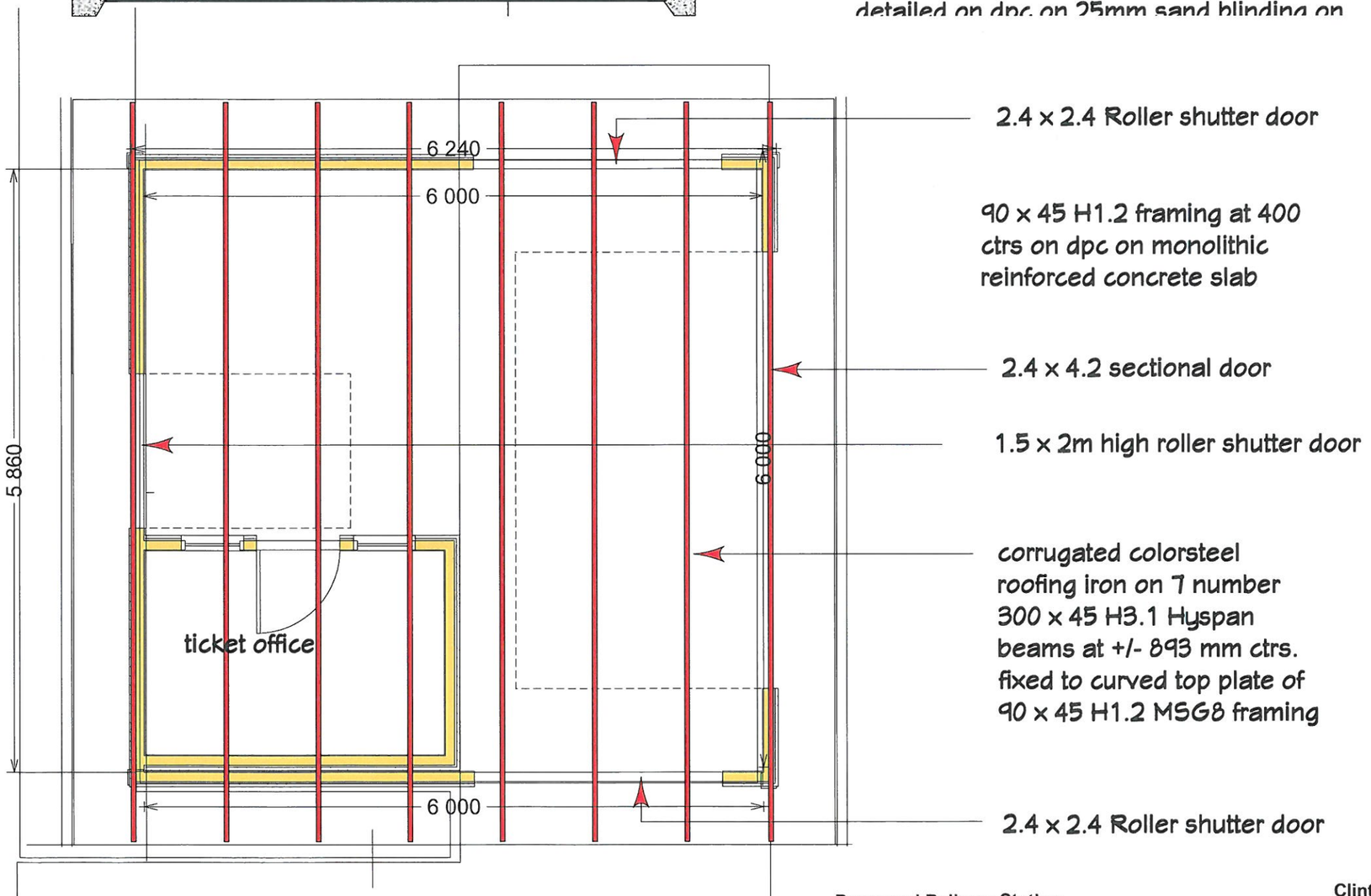

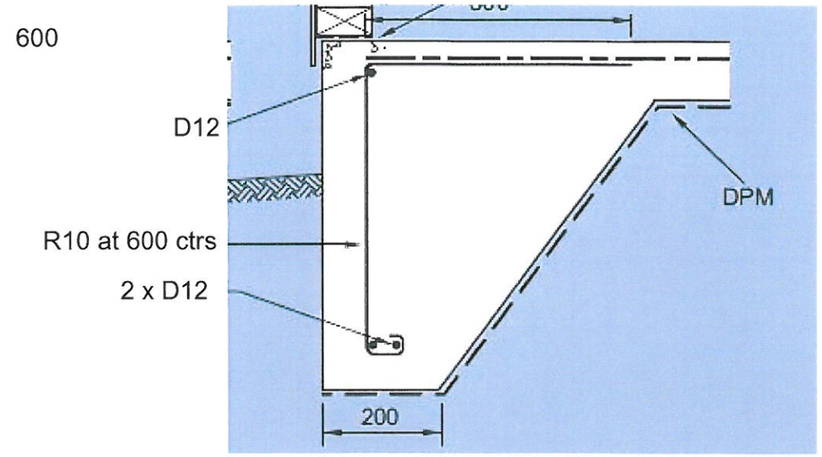

Monolithic concrete slab with perimeter foundation

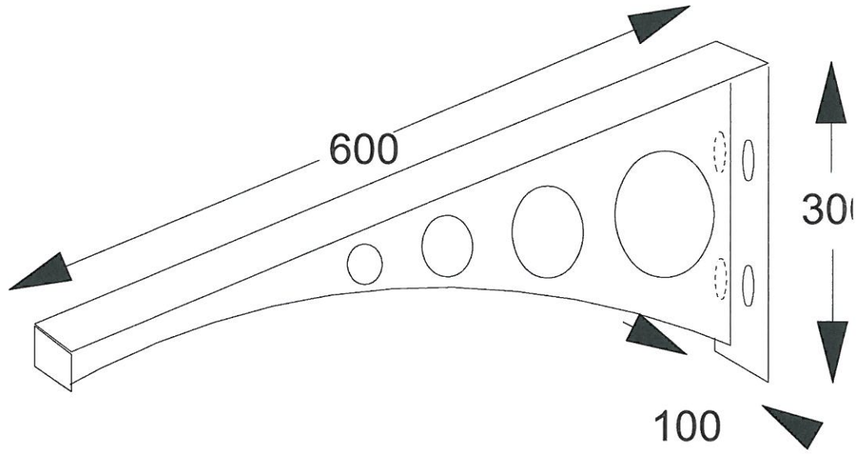

As ProposedPlan & Section

DO NOT SCALE OFF PLAN
CONTRACTOR SHALL VERIFY ALL CONDITIONS AND DIMENSIONS ON SITE BEFORE COMMENCEMENT OF ANY WORK. ALL WORK TO BE CARRIED OUT TO BEST PRACTICE AND COMPLY WITH EXISTING STATUTORY LEGISLATION AND RELEVANT STANDARDS.

Proposed Railway Station
Cross Creek Railway Society
Featherston

Clint Taylor BSc. Arch LBP Design 2
Cunning Plans 08 Ltd.
3 Yule Grove Greytown
06 304 8809 027 304 1561
cunningplans@xtra.co.nz

Scale A3 Sheet

4

6mm
pasint
mm h

10/07/2013

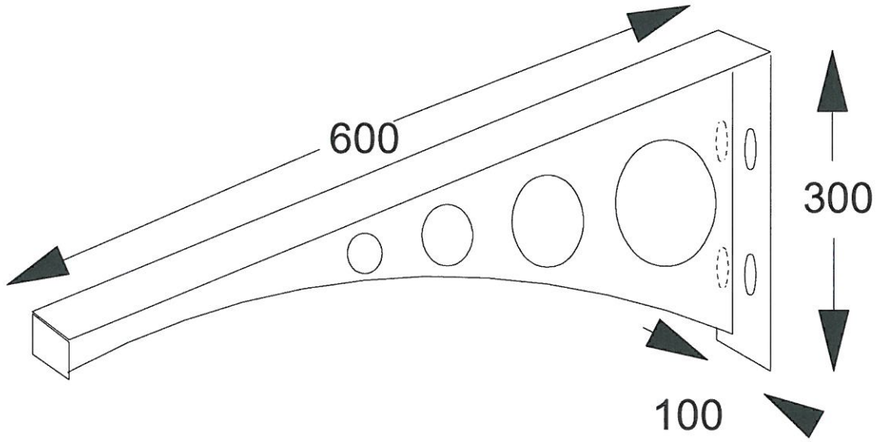

6mm plate galvanised bracket
pasinted black with 4 x 13 dia.
mm holes

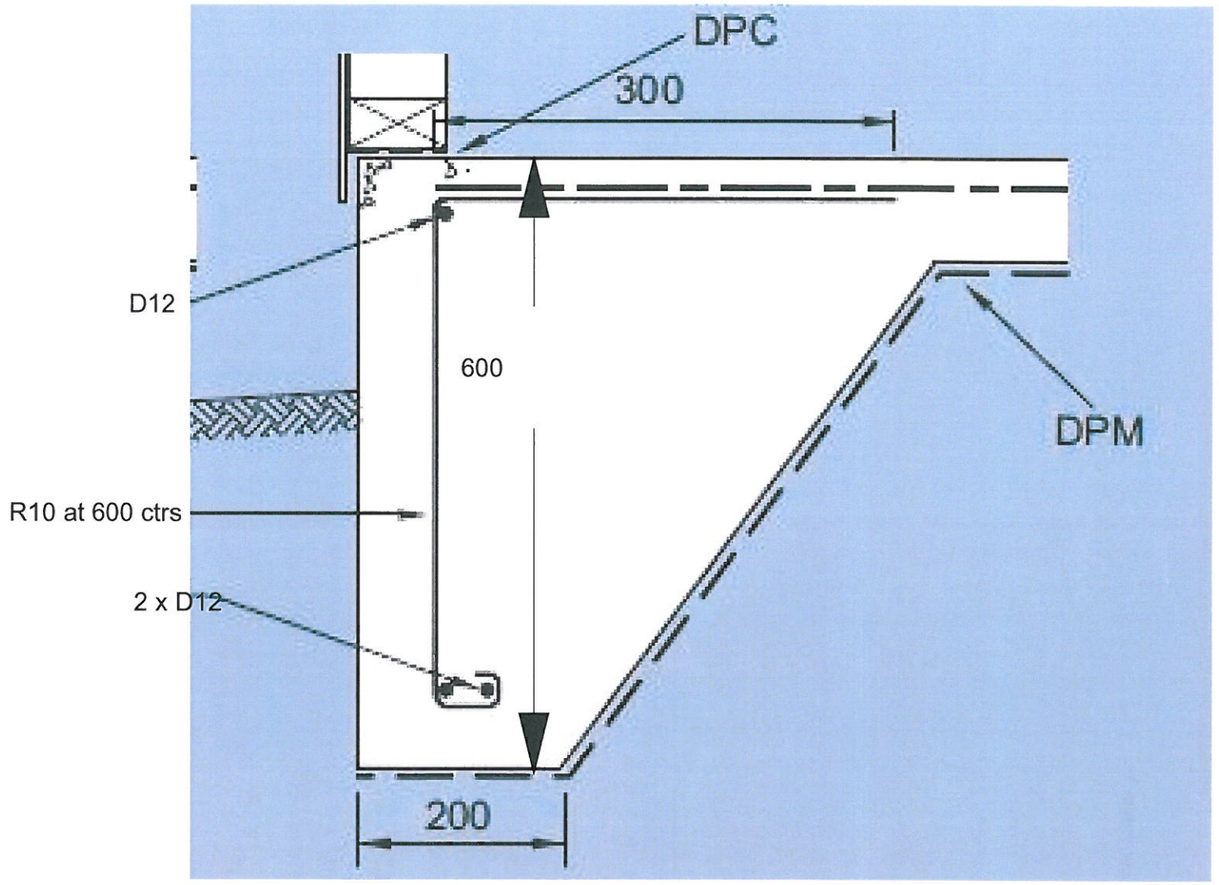

Monolithic concrete slab with
perimeterfoundation

DO NOT SCALE OFF PLAN
CONTRACTOR SHALL VERIFY ALL CONDITIONS AND DIMENSIONS ON SITE BEFORE COMMENCEMENT OF ANY WORK. ALL WORK TO BE CARRIED OUT TO BEST PRACTICE AND COMPLY WITH EXISTING STATUTORY LEGISLATION AND RELEVANT STANDARDS.

Proposed Railway Station
Cross Creek Railway Society
Featherston

Clint Taylor BSc. Arch LBP Design 2
Cunning Plans 08 Ltd.
3 Yule Grove Greytown
06 304 8809 027 304 1561
cunningplans@xtra.co.nz

Scale A3 Sheet

5

10/07/2013